Electrolux PROFESSIONAL

SkyLine PremiumS Natural Gas Combi Oven 10GN2/1, Green Version

ITEM #

MODEL #

NAME #

SIS #

AIA #

229763 (ECOG102T3G0)	SkyLine PremiumS Combi Boiler Oven with touch screen control, 10x2/1GN, gas, 3 cooking modes (automatic, recipe program, manual), automatic cleaning, Green Version with 3-glass door
229793 (ECOG102T3G6)	SkyLine PremiumS combi boiler oven with touch screen control, 10x2/1GN, gas, 3 cooking modes (automatic, recipe program, manual), automatic cleaning, Green Version with 3-glass door

Short Form Specification

Item No.

Combi oven with high resolution full touch screen interface, multilanguage
- Built-in steam generator with real humidity control based upon Lambda Sensor
- OptiFlow air distribution system to achieve maximum performance with 7 fan speed levels
- SkyClean: Automatic and built-in self cleaning system with integrated descale of the steam generator. 5 automatic cycles (soft, medium, strong, extra strong, rinse-only) and green functions to save energy, water, detergent and rinse aid
- Cooking modes: Automatic (9 food families with 100+ different pre-installed variants); Programs (a maximum of 1000 recipes can be stored and organized in 16 different categories); Manual (steam, combi and convection cycles); Specialistic Cycles (regeneration, Low Temperature Cooking, proving, EcoDelta, Sous-Vide, Static-Combi, Pasteurization of pasta, dehydration, Food Safe Control and Advanced Food Safe Control)
- Special functions: MultiTimer cooking, Plan-n-Save to cut running costs, Make-it-Mine to customize interface, SkyHub to customize homepage, agenda MyPlanner, SkyDuo connection to SkyLine ChillerS, automatic backup mode to avoid downtime
- USB port to download HACCP data, programs and settings. Connectivity ready
- 6-point multi sensor core temperature probe
- Triple-glass door with double LED lights line
- Stainless steel construction throughout
- Supplied with n.1 tray rack 2/1 GN, 67 mm pitch.

APPROVAL:

Main Features

- Built-in steam generator for highly precise humidity and temperature control according to the chosen settings.
- Real humidity control based upon Lambda Sensor to automatically recognize quantity and size of food for consistent quality results.
- Dry, hot convection cycle (25 °C - 300 °C): ideal for low humidity cooking.
- Combination cycle (25 °C - 300 °C): combining convected heat and steam to obtain humidity controlled cooking environment, accelerating the cooking process and reducing weight loss.
- Low temperature Steam cycle (25 °C - 99 °C): ideal for sous-vide, re-thermalization and delicate cooking.
  Steam cycle (100 °C): seafood and vegetables.
  High temperature steam (25 °C - 130 °C).
- Automatic mode including 9 food families (meat, poultry, fish, vegetables, pasta/rice, eggs, savory and sweet bakery, bread, dessert) with 100+ different pre-installed variants. Through Automatic Sensing Phase the oven optimizes the cooking process according to size, quantity and type of food loaded to achieve the selected cooking result. Real time overview of the cooking parameters. Possibility to personalize and save up to 70 variants per family.
- Cycles+:
  - Regeneration (ideal for banqueting on plate or rethermalizing on tray),
  - Low Temperature Cooking (to minimize weight loss and maximize food quality) Patented US7750272B2 and related family,
  - Proving cycle,
  - EcoDelta cooking, cooking with food probe maintaining preset temperature difference between the core of the food and the cooking chamber,
  - Sous-vide cooking,
  - Static Combi (to reproduce traditional cooking from static oven),
  - Pasteurization of pasta,
  - Dehydration cycles (ideal for drying fruits, vegetables, meats, seafood),
  - Food Safe Control (to automatically monitor safety of cooking process in compliance with HACCP hygienic standards) Patented US6818865B2 and related family,
  - Advanced Food Safe Control (to drive the cooking with pasteurization factor).
- Programs mode: a maximum of 1000 recipes can be stored in the oven's memory, to recreate the exact same recipe at any time. The recipes can be group in 16 different categories to better organize the menu. 16-step cooking programs also available.
- MultiTimer function to manage up to 20 different cooking cycles at the same time, improving flexibility and ensuring excellent cooking results. Can be saved up to 200 MultiTimer programs.
- Fan with 7 speed levels from 300 to 1500 RPM and reverse rotation for optimal evenness. Fan stops in less than 5 seconds when door is opened.
- 6-point multi sensor core temperature probe for maximum precision and food safety.
- Pictures upload for full customization of cooking

cycles.

- Automatic fast cool down and pre-heat function.
- Different chemical options available: solid (phosphate-free), liquid (requires optional accessory).
- GreaseOut: predisposed for integrated grease drain and collection for safer operation (dedicated base as optional accessory).
- USB port to download HACCP data, share cooking programs and configurations.
  USB port also allows to plug-in sous-vide probe (optional accessory).
- Back-up mode with self-diagnosis is automatically activated if a failure occurs to avoid downtime.
- Capacity: 10 GN 2/1 or 20 GN 1/1 trays.
- OptiFlow air distribution system to achieve maximum performance in chilling/heating eveness and temperature control thanks to a special design of the chamber.

Construction

- Triple thermo-glazed door with 2 hinged inside panels for easy cleaning and double LED lights line.
- Hygienic internal chamber with all rounded corners for easy cleaning.
- 304 AISI stainless steel construction throughout.
- Front access to control board for easy service.
- Integrated spray gun with automatic retracting system for fast rinsing.
- IPX 5 spray water protection certification for easy cleaning.
- Supplied with n.1 tray rack 2/1 GN, 67 mm pitch.

User Interface & Data Management

- High resolution full touch screen interface (translated in more than 30 languages) - color-blind friendly panel.
- Make-it-mine feature to allow full personalization or locking of the user interface.
- SkyHub lets the user group the favorite functions in the homepage for immediate access.
- MyPlanner works as an agenda where the user can plan the daily work and receive personalized alerts for each task.
- With SkyDuo the Oven and the Blast Chiller are connected to each other and communicate in order to guide the user through the cook&chill process optimizing time and efficiency (requires optional accessory).
- Connectivity ready for real time access to connected appliances from remote and HACCP monitoring (requires optional accessory).
- Trainings and guidances supporting materials easily accessible by scanning QR-Code with any mobile device.
- Automatic consumption visualization at the end of the cycle.
- Connectivity ready for real time access to connected appliances from remote and data monitoring (requires optional accessory – contact the Company for more details).

Sustainability

- Human centered design with 4-star certification for ergonomics and usability.
- Wing-shaped handle with ergonomic design and hands-free opening with the elbow, making managing trays simpler. Protected by registered design (EM003143551 and related family).
- Reduced power function for customized slow cooking cycles.
- SkyClean: Automatic and built-in self cleaning system with integrated descale of the steam generator. 5 automatic cycles (soft, medium, strong, extra strong, rinse-only) and green functions to save energy, water, detergent and rinse aid. Also programmable with delayed start.
- Plan-n-Save function organizes the cooking sequence of the chosen cycles optimizing the work in the kitchen from a time and energy efficiency point of view.
- Zero Waste provides chefs with useful tips for minimizing food waste.
  Zero Waste is a library of Automatic recipes that aims to:
  - give a second life to raw food close to expiration date (e.g.: from milk to yogurt)
  - obtain genuine and tasty dishes from overripe fruit/vegetables (usually considered not appropriate for sale)
  - promote the use of typically discarded food items (e.g.: carrot peels).
- Energy Star 2.0 certified product.

Optional Accessories

External reverse osmosis filter for single tank Dishwashers with atmosphere boiler and Ovens	PNC 864388	❑
Water softener with cartridge and flow meter (high steam usage)	PNC 920003	❑
Water filter with cartridge and flow meter for 6 & 10 GN 1/1 ovens (low-medium steam usage - less than 2hrs per day full steam)	PNC 920004	❑
Water softener with salt for ovens with automatic regeneration of resin	PNC 921305	❑
Wheel kit for 6 & 10 GN 1/1 and 2/1 GN oven base (not for the disassembled one)	PNC 922003	❑
Pair of AISI 304 stainless steel grids, GN 1/1	PNC 922017	❑
Pair of grids for whole chicken (8 per grid - 1,2kg each), GN 1/1	PNC 922036	❑
AISI 304 stainless steel grid, GN 1/1	PNC 922062	❑
AISI 304 stainless steel grid, GN 2/1	PNC 922076	❑
External side spray unit (needs to be mounted outside and includes support to be mounted on the oven)	PNC 922171	❑
Pair of AISI 304 stainless steel grids, GN 2/1	PNC 922175	❑
Baking tray for 5 baguettes in perforated aluminum with silicon coating, 400x600x38mm	PNC 922189	❑
Baking tray with 4 edges in perforated aluminum, 400x600x20mm	PNC 922190	❑
Baking tray with 4 edges in aluminum, 400x600x20mm	PNC 922191	❑
Pair of frying baskets	PNC 922239	❑
AISI 304 stainless steel bakery/pastry grid 400x600mm	PNC 922264	❑
Double-step door opening kit	PNC 922265	❑
Grid for whole chicken (8 per grid - 1,2kg each), GN 1/1	PNC 922266	❑
USB probe for sous-vide cooking	PNC 922281	❑
Kit universal skewer rack and 6 short skewers for Lengthwise and Crosswise ovens	PNC 922325	❑
Universal skewer rack	PNC 922326	❑
6 short skewers	PNC 922328	❑
Multipurpose hook	PNC 922348	❑
4 flanged feet for 6 & 10 GN , 2", 100-130mm	PNC 922351	❑

The company reserves the right to make modifications to the products without prior notice. All information correct at time of printing.

2024.10.08

- Grease collection tray, GN 2/1, H=60 mm PNC 922357 ❑
- Grid for whole duck (8 per grid - 1,8kg each), GN 1/1 PNC 922362 ❑
- Thermal cover for 10 GN 2/1 oven and blast chiller freezer PNC 922366 ❑
- Tray support for 6 & 10 GN 2/1 disassembled open base PNC 922384 ❑
- Wall mounted detergent tank holder PNC 922386 ❑
- USB single point probe PNC 922390 ❑
- IoT module for OnE Connected and SkyDuo (one IoT board per appliance - to connect oven to blast chiller for Cook&Chill process). PNC 922421 ❑
- Tray rack with wheels 10 GN 2/1, 65mm pitch PNC 922603 ❑
- Tray rack with wheels, 8 GN 2/1, 80mm pitch PNC 922604 ❑
- Slide-in rack with handle for 6 & 10 GN 2/1 oven PNC 922605 ❑
- Bakery/pastry tray rack with wheels 400x600mm for 10 GN 2/1 oven and blast chiller freezer, 80mm pitch (8 runners) PNC 922609 ❑
- Open base with tray support for 6 & 10 GN 2/1 oven PNC 922613 ❑
- Cupboard base with tray support for 6 & 10 GN 2/1 oven (only for 229763) PNC 922616 ❑
- External connection kit for liquid detergent and rinse aid PNC 922618 ❑
- Stacking kit for 6 GN 2/1 oven placed on gas 6 GN 2/1 oven PNC 922625 ❑
- Trolley for slide-in rack for 10 GN 2/1 oven and blast chiller freezer PNC 922627 ❑
- Trolley for mobile rack for 6 GN 2/1 on 6 or 10 GN 2/1 ovens PNC 922631 ❑
- Stainless steel drain kit for 6 & 10 GN oven, dia=50mm PNC 922636 ❑
- Plastic drain kit for 6 &10 GN oven, dia=50mm PNC 922637 ❑
- Trolley with 2 tanks for grease collection PNC 922638 ❑
- Grease collection kit for GN 1/1-2/1 open base (2 tanks, open/close device for drain) PNC 922639 ❑
- Banquet rack with wheels holding 51 plates for 10 GN 2/1 oven and blast chiller freezer, 75mm pitch PNC 922650 ❑
- Dehydration tray, GN 1/1, H=20mm PNC 922651 ❑
- Flat dehydration tray, GN 1/1 PNC 922652 ❑
- Open base for 6 & 10 GN 2/1 oven, disassembled - NO accessory can be fitted with the exception of 922384 PNC 922654 ❑
- Heat shield for 10 GN 2/1 oven PNC 922664 ❑
- Heat shield-stacked for ovens 6 GN 2/1 on 10 GN 2/1 PNC 922667 ❑
- Kit to convert from natural gas to LPG PNC 922670 ❑
- Kit to convert from LPG to natural gas PNC 922671 ❑
- Flue condenser for gas oven PNC 922678 ❑
- Kit to fix oven to the wall PNC 922687 ❑
- Tray support for 6 & 10 GN 2/1 oven base PNC 922692 ❑
- 4 adjustable feet with black cover for 6 & 10 GN ovens, 100-115mm PNC 922693 ❑
- Detergent tank holder for open base PNC 922699 ❑
- Mesh grilling grid, GN 1/1 PNC 922713 ❑
- Probe holder for liquids PNC 922714 ❑
- Exhaust hood with fan for 6 & 10 GN 2/1 GN ovens PNC 922729 ❑
- Exhaust hood with fan for stacking 6+6 or 6+10 GN 2/1 ovens PNC 922731 ❑
- Exhaust hood without fan for 6&10x2/1 GN oven PNC 922734 ❑
- Exhaust hood without fan for stacking 6+6 or 6+10 GN 2/1 ovens PNC 922736 ❑
- 4 high adjustable feet for 6 & 10 GN ovens, 230-290mm PNC 922745 ❑
- Tray for traditional static cooking, H=100mm PNC 922746 ❑
- Double-face griddle, one side ribbed and one side smooth, 400x600mm PNC 922747 ❑
- Trolley for grease collection kit PNC 922752 ❑
- Water inlet pressure reducer PNC 922773 ❑
- Extension for condensation tube, 37cm PNC 922776 ❑
- Non-stick universal pan, GN 1/1, H=20mm PNC 925000 ❑
- Non-stick universal pan, GN 1/ 1, H=40mm PNC 925001 ❑
- Non-stick universal pan, GN 1/1, H=60mm PNC 925002 ❑
- Double-face griddle, one side ribbed and one side smooth, GN 1/1 PNC 925003 ❑
- Aluminum grill, GN 1/1 PNC 925004 ❑
- Frying pan for 8 eggs, pancakes, hamburgers, GN 1/1 PNC 925005 ❑
- Flat baking tray with 2 edges, GN 1/1 PNC 925006 ❑
- Potato baker for 28 potatoes, GN 1/1 PNC 925008 ❑
- Compatibility kit for installation on previous base GN 2/1 PNC 930218 ❑

Recommended Detergents

- C25 Rinse & Descale tab 2in1 rinse aid and descaler in disposable tablets for Skyline ovens Professional 2in1 rinse aid and descaler in disposable tablets for new generation ovens with automatic washing system. Suitable for all types of water. Packaging: 1 drum of 50 30g tablets. each PNC 0S2394 ❑
- C22 Cleaning Tab Disposable detergent tablets for SkyLine ovens Professional detergent for new generation ovens with automatic washing system. Suitable for all types of water. Packaging: 1 drum of 100 65g tablets. each PNC 0S2395 ❑

The company reserves the right to make modifications to the products without prior notice. All information correct at time of printing.

SkyLine PremiumS
Natural Gas Combi Oven 10GN2/1, Green Version

Front

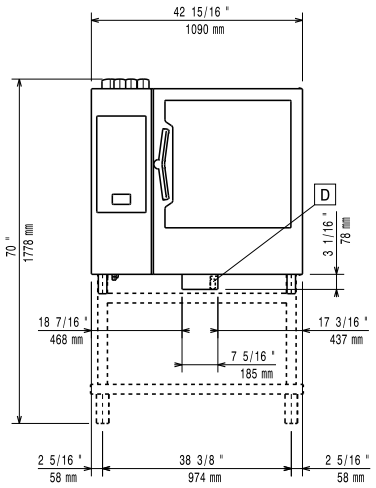

Side

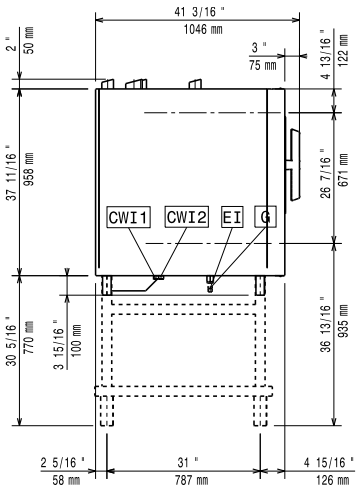

CWI1	= Cold Water inlet 1 (cleaning)	EI	= Electrical inlet (power)
CWI2	= Cold Water Inlet 2 (steam generator)	G	= Gas connection
D	= Drain		
DO	= Overflow drain pipe		

Top

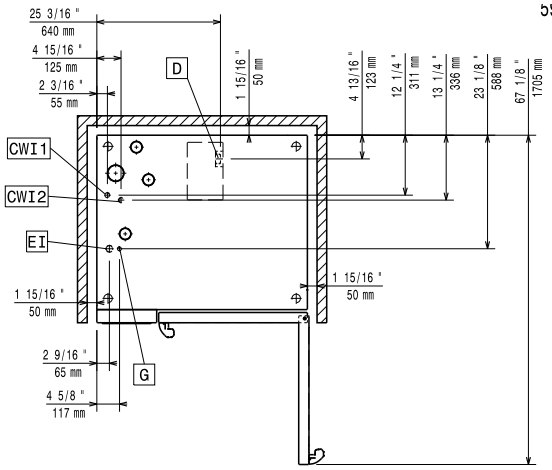

Electric

Supply voltage:	
229763 (ECOG102T3G0)	220-240 V/1 ph/50 Hz
229793 (ECOG102T3G6)	220-230 V/1 ph/60 Hz
Electrical power, default:	1.5 kW

Default power corresponds to factory test conditions. When supply voltage is declared as a range the test is performed at the average value. According to the country, the installed power may vary within the range.

Electrical power max.:	1.5 kW
Circuit breaker required	

Gas

Gas Power:	47 kW
Standard gas delivery:	Natural Gas G20
ISO 7/1 gas connection diameter:	1/2" MNPT
Total thermal load:	160223 BTU (47 kW)

Water:

Water inlet connections "CWI1-CWI2":	3/4"
Pressure, bar min/max:	1-6 bar
Drain "D":	50mm
Max inlet water supply temperature:	30 °C
Chlorides:	<17 ppm
Conductivity:	>50 µS/cm

Electrolux Professional recommends the use of treated water, based on testing of specific water conditions.

Please refer to user manual for detailed water quality information.

Installation:

Clearance:	Clearance: 5 cm rear and right hand sides.
Suggested clearance for service access:	50 cm left hand side.

Capacity:

Trays type:	10 - 2/1 Gastronorm
Max load capacity:	100 kg

Key Information:

Door hinges:	
External dimensions, Width:	1090 mm
External dimensions, Depth:	971 mm
External dimensions, Height:	1058 mm
Net weight:	204 kg
Shipping weight:	229 kg
Shipping volume:	
229763 (ECOG102T3G0)	1.59 m³
229793 (ECOG102T3G6)	1.58 m³

ISO Certificates

ISO Standards:	ISO 9001; ISO 14001; ISO 45001; ISO 50001

The company reserves the right to make modifications to the products without prior notice. All information correct at time of printing.